THIS DRAWING IS UNPUBLISHED. RELEASED FOR PUBLICATION ,19 .
© COPYRIGHT 19 BY AMP INCORPORATED. ALL RIGHTS RESERVED.

LOC	DIST
FT	4

REVISIONS

P	LTR	DESCRIPTION	DATE	DWN	APVD
	0	RELEASED PER NPR 5710 WAS 98-7970-13-2	25 SEP 98	–	–
	A	REV PER EC 0G3B-0286-01	15JAN02	MHC	SH

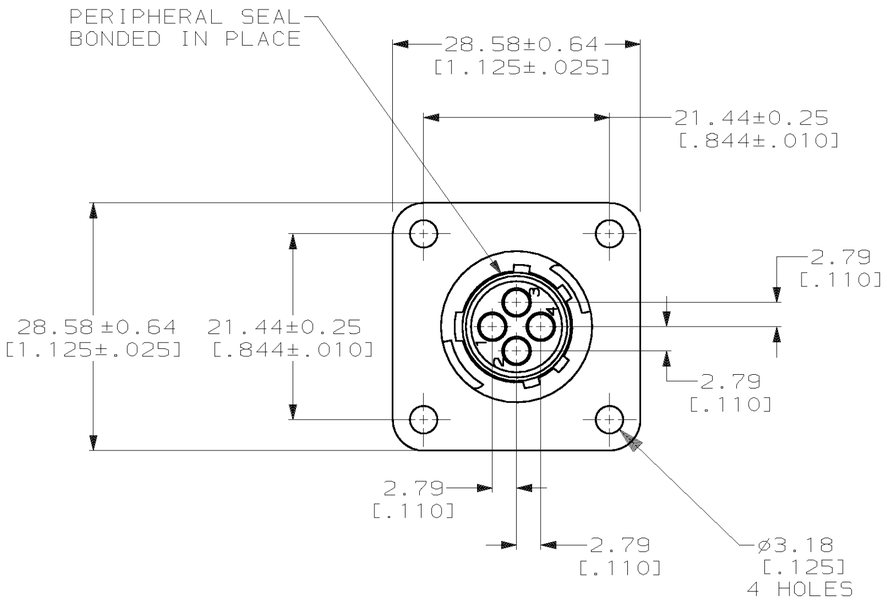

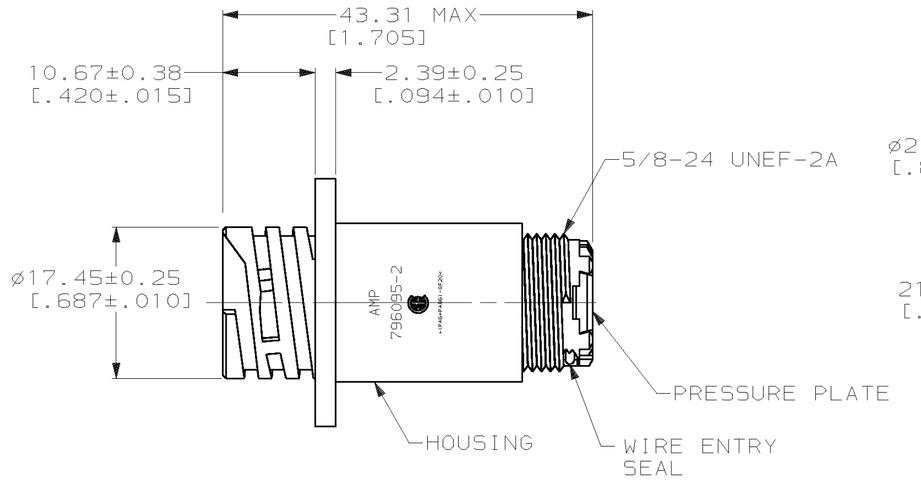

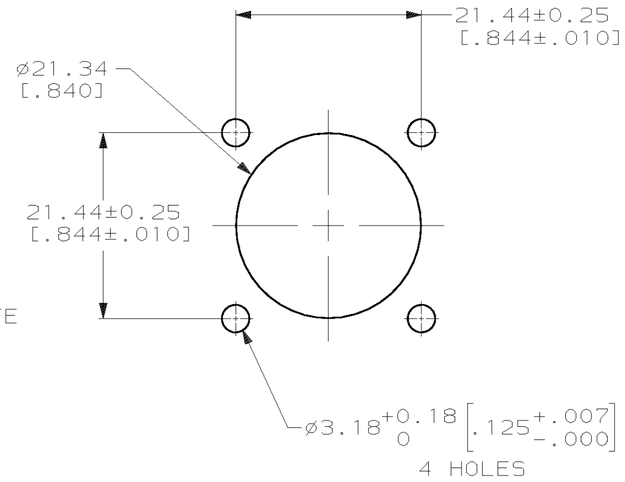

RECOMMENDED PANEL CUTOUT

1. THIS PART WILL ACCEPT FOUR (4) MULTIMATE PIN CONTACTS.

2. HOUSING AND PRESSURE PLATE: NYLON, BLACK.
PERIPHERAL SEAL: ELASTOMER, GRAY.
WIRE ENTRY SEAL: ELASTOMER, RED-IRON OXIDE.

796095-2

PART NUMBER

THIS DRAWING IS A CONTROLLED DOCUMENT.

DIMENSIONS: mm [INCHES]

TOLERANCES UNLESS OTHERWISE SPECIFIED:
0 PLC ±–
1 PLC ±–
2 PLC ±0.13 [.005]
3 PLC ±–
4 PLC ±–
ANGLES ±–

MATERIAL –
FINISH –

DWN C.DORWART 25 SEP 98
CHK R.WALTER 25 SEP 98
APVD R.WALTER 25 SEP 98
PRODUCT SPEC –
APPLICATION SPEC –
WEIGHT –

AMP Incorporated
Harrisburg, PA 17105-3608

NAME RECEPTACLE ASSEMBLY, 11-4, STANDARD SEX, SERIES I, SEALED, CIRCULAR PLASTIC CONNECTOR

SIZE	CAGE CODE	DRAWING NO	RESTRICTED TO
A2	00779	C- 796095	–

CUSTOMER DRAWING | SCALE 2:1 | SHEET 1 OF 1 | REV A

AMP 1471-9 REV 11JUN97

15-JAN-02 13:27:36 amp15921 /ws/escdesig/ecns/Weldon_ecs/0G3B-0286-01